Technical data STC-HH

Horizontal toggle clamp wth horizontal base plate

Order-No.	Opening	Automatic adjustment	Clamping force		
	mm	mm	appr. N	kg	qty.
STC-HH20	35	20	1,100	0.20	6
STC-HH50	40	35	2,500	0.38	6
STC-HH70	60	35	2,500	0.42	6

- In the clamped position, the lever is horizontal
- Automatic and infinitely variable adjustment of the clamping height up to 35 mm while clamping force remains unchanged – without having to make manual changes to the position of the pressure screws
- Clamping force is variable up to 2,500 N depending on the adjustment of the set screw in the cantilevered joint
- Sturdy, tempered metal sheets for a long service life
- Hole pattern on the base plate designed to facilitate fast and secure clamping set-up for metric and imperial
- High-quality oil resistant two-component plastic handle

3D CAD data for download at http://bessey.partcommunity.com and www.bessey.de

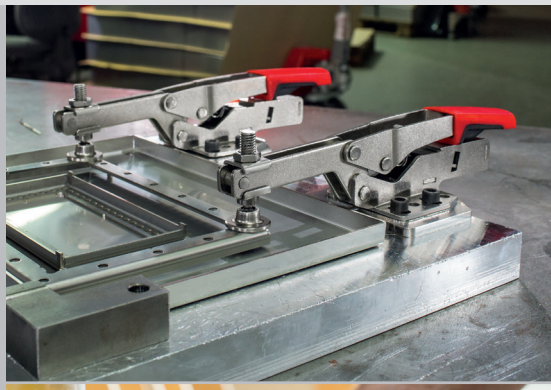

Table of dimensions

		L1	L2	L3	L4	L5	L6	L7	L8	L9	H1	H2	H3	H4	H5	H6	B1	B2	B3	B4	Lo1	Lo2	Lo3	Lo4	Ø
STC-HH20	mm	169	58	39	18.7	91	43	32	50	–	38	125	11	42	22	–	10	6	26	48	25.7	12.7	28	27–32	5.5
	"	6.65	2.28	1.54	0.74	3.58	1.69	1.26	1.97	–	1.50	4.92	0.43	1.65	0.87	–	0.39	0.24	1.02	1.89	1.01	0.50	1.10	1.06–1.25	0.22
STC-HH50	mm	217	77	40	24.6	113	53	38	72	–	47	158	14	50	27	–	13	8	32	60	25.4	25.4	38	33–48	6.5
	"	8.54	3.03	1.57	0.97	4.45	2.09	1.50	2.83	–	1.85	6.22	0.55	1.97	1.06	–	0.51	0.31	1.26	2.36	1.00	1.00	1.50	1.30–1.89	0.26
STC-HH70	mm	217	77	40	24.6	113	53	38	72	–	64	175	14	68	44	–	13	8	32	60	25.4	25.4	38	33–48	6.5
	"	8.54	3.03	1.57	0.97	4.45	2.09	1.50	2.83	–	2.52	6.89	0.55	2.68	1.73	–	0.51	0.31	1.26	2.36	1.00	1.00	1.50	1.30–1.89	0.26

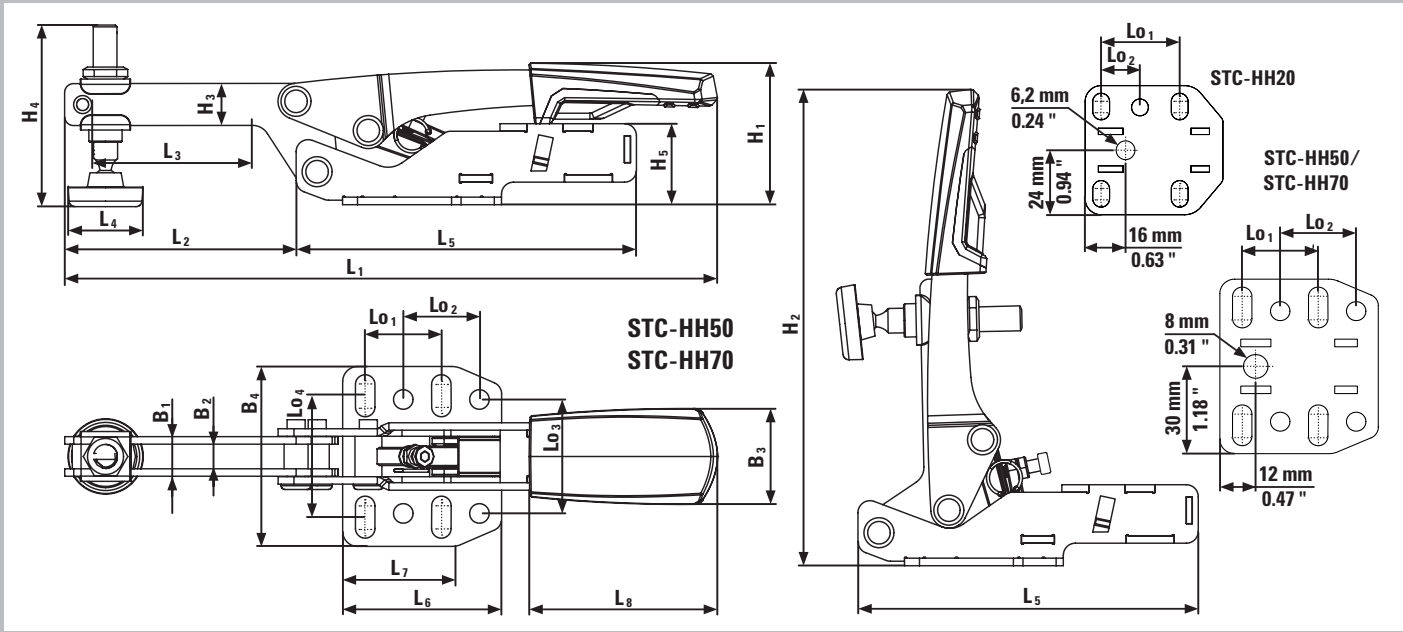

BESSEY Tool GmbH & Co. KG ▪ Mühlwiesenstraße 40 ▪ 74321 Bietigheim-Bissingen, Germany
Fon +49 7142 401-0 ▪ Fax +49 7142 401-452 ▪ E-Mail: info@bessey.de ▪ www.bessey.de